9

DOPAMINE

ANTHONY A. GRACE

Studies into the regulation of the dopamine (DA) system and its postsynaptic actions are often stymied by the myriad of actions that this neurotransmitter can produce. Thus, DA has been found to exert actions on the neurons it innervates both directly and via G-protein–coupled receptors. Moreover, this transmitter can modulate afferent input within these target regions, as well as alter intercellular communication via its actions on gap junctions. Finally, DA can potently modulate its own dynamics, acting via autoreceptors on DA nerve terminals and on DA neuron somata. In fact, the DA system is under potent dynamic regulation in the short term by a multitude of feedback systems, and in response to prolonged alterations is subject to powerful homeostatic mechanisms that can compensate for dramatic changes in DA system function. Such homeostatic alterations can be compensatory in nature, such as those that occur in response to a partial DA system lesion, or pathologic, such as the sensitization that can occur with repeated psychostimulant administration. Nonetheless, the importance of this neurotransmitter system in a broad array of human disorders ranging from Parkinson's disease to schizophrenia has driven an intensive array of investigations oriented toward increasing our understanding of this complex system in normal conditions as well as disease states. This chapter attempts to summarize some of the major research findings that have occurred within the last 5 years, and place them into a functional framework. This is not meant to be inclusive: A search of Medline indicated that there were over 16,000 papers published on DA during the past 5 years! Because of the exceedingly broad range that this topic encompasses, the focus is primarily on a subset of the numerous improvements that are most related to advancing our understanding of psychiatric disorders in particular. Topics related to specific disorders, such as drug abuse, schizophrenia, and so on, are deferred to the appropriate chapters in this volume.

Anthony A. Grace: Departments of Neuroscience and Psychiatry, University of Pittsburgh, Pittsburgh, Pennsylvania.

DA NEURON ANATOMY AND PHYSIOLOGY

Both *in vivo* and *in vitro* studies have demonstrated that DA-containing neurons in the midbrain exhibit spontaneous spike firing that is driven by an endogenous pacemaker conductance (1–3), with their activity modulated by afferent inputs. One of the prominent regulators of DA neuron activity is the DA autoreceptor. It has been known for some time that DA neurons are very sensitive to DA agonists, which inhibit spike firing as well as cause a presynaptic inhibition of DA synthesis and release. Studies indicate that DA neuron somatodendritic autoreceptors are stimulated by an extracellular pool of DA released from the dendrites of neighboring DA neurons rather than exclusively by autoinhibition back onto the releasing neuron. This is supported by data showing that partial lesions of the DA system result in DA autoreceptor supersensitivity in the remaining neurons, which would only occur if the remaining neurons were responding to the decrease in DA caused by the loss of neighboring neurons (4). The autoreceptors are believed to exert a tonic down-regulation of DA neuron activity, maintaining their firing within a stable range of activity (4,5). These autoreceptors appear to be primarily of the D2 type, because D2-deficient mice do not show autoreceptor-mediated inhibition of firing (6). Moreover, inhibition of monoamine oxidase potentiates this inhibition (7,8), whereas inhibition of catechol-o-methyl transferase does not alter this response (9).

Exogenous transmitters also potently regulate dopamine neurons. Thus, GABA afferents both from striatonigral neurons as well as from local circuit neurons in the midbrain cause inhibition of DA neuron activity (10) by both a GABA-A– and GABA-B–mediated action (11–13). Glutamate has also been shown to exert multiple actions on DA neuron activity. Glutamate applied *in vivo* increases burst firing (14). N-methyl-D-aspartate (NMDA) receptor activation mediates a slow excitatory postsynaptic potential (EPSP) in these neurons (8), whereas metabotropic glutamate agonists are reported to depress both excitatory and inhibitory afferent input to these neurons (15). This latter effect is apparently shared by muscarinic receptors, which also depress both excitatory and inhibitory afferents, presumably via a presynaptic action (16,17).

Burst Firing

Studies have shown that DA neuron discharge is an essential component of the DA release process (18). The firing pattern of DA neurons also is effective in modulating release, with burst firing in particular being an important regulator of DA transmission. Thus, studies have shown that burst firing in DA neurons is associated with induction of c-fos and NG1-A in postsynaptic sites (19,20), and this response demonstrates a spatial and temporal specificity with respect to brain region, genes activated, and cell phenotype. One factor that is thought to regulate burst firing is the glutamatergic system. Several studies have shown that iontophoresis of glutamate onto DA neurons *in vivo* lead to burst firing (14), as do stimulation of glutamatergic afferents to DA neurons (21,22); however, the evidence for glutamate acting alone to induce burst firing *in vitro* is equivocal (23). In contrast, evidence shows that burst firing can be induced *in vitro* by blockade of apamin-sensitive potassium channels that modulate a nifedipine-sensitive calcium conductance (24). One source of glutamatergic input to ventral tegmental area (VTA) DA neurons is proposed to arise from the prefrontal cortex (PFC) (25); however, recent studies (26, 27) show that the PFC input to the VTA innervates only the small proportion of VTA DA neurons that project to the PFC, providing a direct feedback loop, whereas the VTA-accumbens neurons innervated from the PFC are exclusively GABAergic neurons; therefore, it is unlikely that activation of the PFC can induce increased DA levels in the accumbens by a direct projection to these neurons (28). On the other hand, there is evidence that activation of the subiculum by excitatory amino acids increases accumbens DA (29,30) via activation of DA neurons that involves a pathway through the nucleus accumbens (31).

Afferent Input

The feedback systems between DA neurons and their postsynaptic targets appear to be quite complex, particularly in the primate. By analyzing a large number of retrograde and anterograde tracings, Haber and associates (32) found that different striatal subdivisions are linked by overlapping feedback to DA neurons, in a manner that suggests an ascending spiral of regulation extending from the shell to the core to the central striatum and finally to the dorsolateral striatum (Fig. 9.1). As pointed out by Haber, such an anatomic arrangement could account for the parallel psychomotor, affective, and cognitive disturbances seen in a variety of psychiatric disorders.

The striatum provides a powerful feedback regulation of DA neuron firing. Thus, alterations in striatal activity potently affect DA cell activity states. Striatal neuron activation is known to cause an activation of DA neuron firing (10,33). Moreover, single-pulse stimulation of the striatum directly, or indirectly via activation of the PFC in rats, causes an inhibition/excitation response pattern (10,25). This relationship can be altered by manipulation of second messenger systems in the striatum. One system in particular that seems to affect striatal activation, leading to an alteration

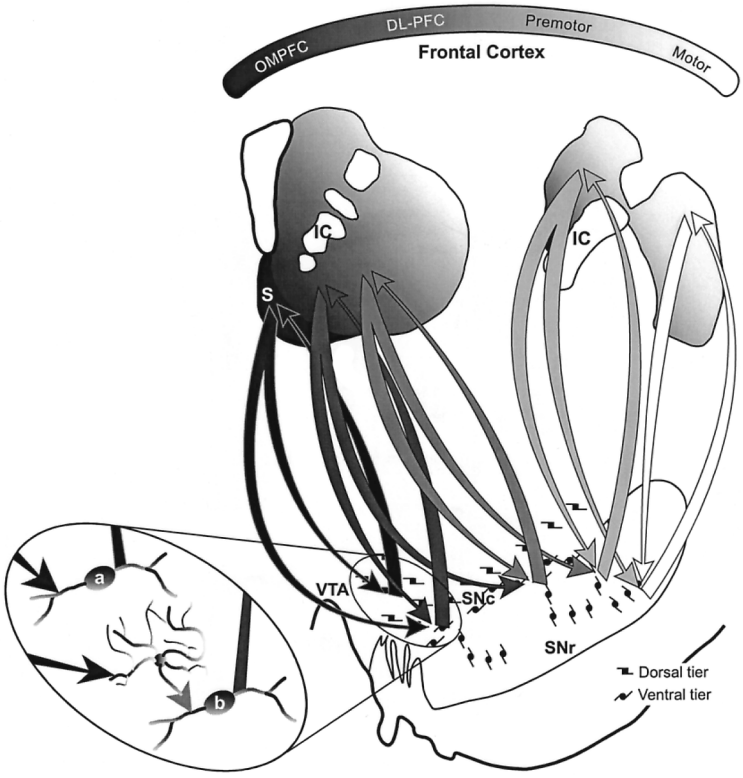

FIGURE 9.1. Studies using retrograde and anterograde tracers reveal that the feedback system between the midbrain DA neurons and their striatal targets contains both reciprocal and feed-forward components. The shell of the accumbens *(left)* receives inputs from hippocampus, amygdala, and limbic cortex, and projects to both the ventral tegmental area (VTA) and dorsomedial substantia nigra DA neurons. Projections from the VTA back to the shell form the ''closed'' portion of this loop. The core receives afferent input from the orbital and medial prefrontal cortex (OMPFC); the afferent projection to the core from the medial substantia nigra (SN) then forms the first part of the spiral. The core in turn projects to more ventrodorsal SN regions; therefore, ventral striatal regions can modulate the dopaminergic influence over more dorsal striatal regions via the spiraling midbrain-striatal-midbrain connections. The magnified insert shows a model of the reciprocal versus feed-forward loops. The reciprocal component is proposed to (a) directly inhibit the DA neuron, whereas the feed-forward, nonreciprocal component terminates on a GABAergic interneuron; or (b) indirectly excite the DA neuron by disinhibition. DL-PFC, dorsolateral prefrontal cortex; IC, internal capsule; S, shell; Snc, substantia nigra, zona compacta; Snr, substantia nigra, zona reticulata; VTA, ventral tegmental area. (From Haber et al., 2000; used with permission.)

in DA neuron activity, is the nitric oxide (NO) system. Increasing NO in the striatum by infusion of the substrate for the synthetic enzyme nitric oxide synthetase (NOS), coupled with striatal or cortical stimulation, was found to increase the firing rate of striatal neuron DA neurons. This effect was mimicked by infusion of the nitric oxide generator hydroxylamine. In contrast, NOS inhibitors failed to affect baseline DA cell firing but did increase their response to stimulation (34); therefore, NO signaling in the striatum facilitates DA neurotransmission by modulation of corticostriatal and striatonigral pathways. NO also appears to have a role in regulating terminal DA release (see the following).

Stress and DA Neuron Activity

Stress appears to affect many monoamine systems. Stress plays a role both in acute behavioral responses and adaptations to chronic stressful conditions. Although the noradrenergic system has played a major role in these processes, recent evidence supports a role for the DA system as well. Studies have shown that, on presentation of stress, there are differential increases in DA dynamics depending on the brain regions involved. Thus, stressful stimuli tend to cause the largest increase in DA levels in the PFC region, with markedly smaller changes in the limbic and dorsal striatal regions (35); however, this relationship is altered by lesions of different nuclei. Thus, stress causes release of DA in the amygdala (36), and lesions of the amygdala tend to block stress-induced increases in PFC DA levels (37). Lesions of the PFC also affect this response. Studies in which the PFC DA innervation is lesioned show that subsequent stressors cause a much larger increase in DA levels within the nucleus accumbens, particularly with respect to the duration of the response (38). This suggests that PFC DA released in response to stress actually blunts the responsiveness of the subcortical limbic DA system. In contrast, 6-OHDA lesions of PFC DA levels were found to decrease the basal electrophysiologic activity of VTA DA neurons (39). Given that basal DA levels in the accumbens are normal, one interpretation is that the DA release system has adapted to the diminished DA neuron drive, allowing normal levels of DA transmission to occur. However, if a stimulus then causes an increase in DA neuron firing, the compensated release mechanism would produce an augmented response. Thus, the magnitude of increase in action potential-dependent DA release into the accumbens that occurs in response to a challenge may be augmented when the PFC DA response is attenuated (39).

Repeated stress also has important clinical implications with regard to the DA system and exacerbation of schizophrenia. A recent study examined how chronic stress in the form of cold exposure affects the discharge of VTA DA neurons. Thus, after exposing rats to cold, there was a 64% decrease in the number of spontaneously active DA neurons, with no significant alteration in their average firing rate. Nonetheless, there was a subpopulation of neurons that exhibited excessive burst activity in the exposed rats (40). Therefore, unlike acute exposure to stressful or noxious stimuli, chronic stress actually attenuates DA neuron baseline activity. Such a decrease in baseline activity could enable the system to show a magnified response to activating stimuli, thereby producing a sensitized DA response.

REGULATION OF DA RELEASE

DA appears to be released by multiple factors within its postsynaptic target; moreover, once it is released, there are several mechanisms that can modulate its site of action. In general, the majority of evidence suggests that DA is released primarily in a spike-dependent manner, because inactivation of DA neuron firing virtually eliminates DA release within the striatum (18). Carbon fiber recordings, which allow rapid measurement of DA overflow, show that stimulation of DA axons causes rapid release of transmitter. Moreover, the release varies with tissue content, with PFC showing much lower levels of release compared to accumbens at a given stimulus frequency (41). DA released by impulse flow is then rapidly removed via the DA transporter, because mice with knockouts of this transporter exhibit 300 times longer clearance half-life compared to controls (42). The amount of DA released by impulses appears to depend on several factors. Previous volumes in the *Generations of Progress* series have detailed how DA release can be modulated by both synthesis- and release-modulating autoreceptors on DA terminals. It is becoming more evident that heteroceptors also play a significant role in modulating DA release (43).

DA release appears to occur via two functionally distinct components. One is the DA that is released in a high-amplitude, brief pulsatile manner by means of action potentials, and then is rapidly removed from the synaptic cleft via reuptake. This has been termed the phasic component of DA release (44), and is believed to underlie most of the behavioral indices of this transmitter. The other is the level of DA present in the extrasynaptic space. This tonic DA exists in very low concentrations; too low to stimulate intrasynaptic DA receptors, but of sufficient level to activate extrasynaptic receptors, including DA terminal autoreceptors (thereby causing feedback-inhibition of phasic DA release) and other extrasynaptic receptor sites. It is this tonic DA compartment that is sampled by slower measures of DA dynamics, such as microdialysis. Recently, evidence has been advanced to define what factors may contribute to the regulation of this tonic DA compartment.

Although studies suggest that neuronal impulse flow is necessary for DA overflow in the striatum, there is substantial evidence that the released DA can be controlled locally by a number of factors. For example, stimulation of cortical inputs increases DA release within the striatum, and evidence suggests that this can occur via afferents to DA cell bodies or presynaptically onto DA terminals, depending on the preparation and site of stimulation. Thus, infusion of excitatory amino acids into the hippocampus subiculum in-

creases DA neuronal activity (31) and DA levels in the striatum in a manner that is dependent on DA neuron impulse flow (29). It is proposed that this subicular-driven DA release may be involved in the modulation of investigatory response to novel and conditioned stimuli (45). Stimulation of the PFC also appears to result in impulse-dependent DA release in the striatum (28). On the other hand, there is evidence suggesting that DA can be released in a manner not dependent on DA neuron firing via stimulation of the hippocampal afferents (46), or amygdala afferents (47) to the accumbens, all of which use glutamate as a transmitter. This purported presynaptic action on DA terminals appears to occur via activation of either NMDA receptors on DA terminals (48) or by metabotropic glutamate receptors (49–51). There is also evidence that glutamate can release acetylcholine or serotonin in the striatum, which in turn can trigger DA release (43). Glutamate may also stimulate DA release via an action on other local systems, such as those producing NO. NO is known to be released from striatal interneurons containing the enzyme NOS, and exert actions on neuronal elements in the vicinity of the release site. Infusion of NOS substrates or NO generator compounds was found to facilitate the release of both glutamate and DA within the striatum in a calcium-dependent manner, and is dependent on vesicular stores (52,53). Moreover, the NO-induced efflux of striatal glutamate was found to indirectly enhance extracellular DA levels in the striatum in a manner dependent on NMDA and AMPA receptors (53,54). Therefore, it is likely that excitatory amino acids and NO interact with DA neuron firing to regulate DA release from presynaptic sites within the striatum.

The ability of cortical glutamate to release tonic DA in the striatum is supported by studies showing that lesions of the cortical input to the striatum cause a decrease in extracellular DA and glutamate within the striatum (55), which would thereby increase in the behavioral response to amphetamine (56). Thus, evidence indicates that alterations in tonic DA levels produced by cortical afferents can potently alter spike-dependent DA release, and thereby modulate DA-dependent behaviors (43,44,57). Such tonic downmodulation of spike-dependent DA release could play a particular role when the uptake system is inactivated by psychostimulants. Thus, although the DA transporter is normally highly effective at removing DA from the synaptic cleft before it can escape into the extracellular space, blockade of the DA transporter would allow substantially higher levels of DA to escape the cleft and contribute to the tonic extracellular DA pool (57). Such a condition is thought to underlie some of the therapeutic actions of psychostimulants in attention deficit/hyperactivity disorder (ADHD) (58).

One problem in attempting to examine the relationship between DA neuron firing rate and DA overflow is the potential disruption in the system caused by probe implantation. This was found to be a significant issue when testing the effects of chronic antipsychotic drug treatment-induced DA neuron depolarization block (59) on DA levels in the striatum. Thus, implantation of a microdialysis probe was found to disrupt DA neuron depolarization block when DA cell activity was assessed 24 hours following probe implantation. However, if the probe was inserted via a preimplanted guide cannula, depolarization block was maintained, and the DA levels were found to be approximately 50% less than in control conditions. Moreover, the relationship between DA neuron firing and release was altered. Thus, although there was no significant correlation between DA cell population burst firing and DA release in control rats, there was a significant correlation between burst firing in the remaining cells and DA levels following administration of chronic antipsychotic drug (60). Thus, correlations between cell firing patterns and DA levels postsynaptically appear to depend on the state of the system.

It is also possible that there may be local fluctuations in tonic DA stimulation that may be a consequence of increases in DA neuron firing. Indeed, studies using voltametric measures have shown that brief elevations in extracellular DA may occur as a consequence of rapid burst firing, overwhelming the DA uptake process (61). This relationship is particularly important during administrations of drugs that interfere with the uptake process, such as cocaine or amphetamine (57,58). Such drugs would cause phasic DA release to rapidly augment tonic DA levels, leading to high extracellular DA and abnormal levels of down-regulation of spike-dependent DA release. In a similar nature, in mice lacking the DA transporter, the extracellular DA is already elevated fivefold over control (62); therefore, there appears to be a tight dynamic interdependence on DA neuron activity levels and DA uptake that determines the contribution of phasic and tonic DA to activity within this system. This tonic/phasic balance has been proposed to underlie normal and dysfunctional DA regulation as it relates to the pathophysiology of schizophrenia, drug abuse, and the treatment of ADHD (44,57,58).

Given the importance of tonic DA system regulation, a literature has emerged regarding the functional relevance of extrasynaptic DA receptors. Indeed, studies have shown that in the PFC, the DA terminals located in the deep layers of cortex do not contain DA transporters (63). As a consequence, the DA released from these sites would be free to diffuse to a much greater extent than in areas such as the striatum and accumbens. This is further substantiated by evidence that a substantial portion of the DA that is released in the PFC is actually taken up and deaminated in norepinephrine (NE) terminals (64). This arrangement would have substantial functional implications. First, it would provide a mechanism for stimulation of the numerous extrasynaptically located D1 terminals on pyramidal neurons (65), which have been proposed to regulate information flow between compartments on pyramidal neurons (66–69). Moreover, such a condition could imply that NE uptake

blockers could serve to increase the functional actions of DA in the PFC by preventing its removal via NE terminals. This may also have implications regarding the clinical actions of NE-selective antidepressant drugs within this brain region.

POSTSYNAPTIC EFFECTS OF DA

DA exerts a myriad of actions on postsynaptic systems. These actions can occur at the level of individual cells in terms of direct postsynaptic actions, as well as altering cellular interactions (via presynaptic effects and network modulation). Moreover, the nature of these effects can vary depending on both the specific region examined and the time course of DA agonist administration.

Striatum

D1 stimulation decreases excitability of dorsal striatal and accumbens neurons (67–69), although others have reported excitation by this agonist (70). Within the dorsal striatum, D1 receptor stimulation decreases current-evoked action potential discharge in hyperpolarized neurons, although an enhancement in excitability can be obtained with longer duration or higher frequency current pulses (71). The decrease in spiking is believed to be owing to a reduction in the peak amplitude of the fast sodium conductance (72, 73), and occurs through activation of protein kinase-A (PKA) (74). Studies show that the D1-mediated inhibition can act synergistically with D2 stimulation-induced inhibition when the agonists are applied simultaneously. However, the D1-mediated decrease in excitability can be reversed to facilitation if the D2 agonist is administered subsequently (75). This temporal dependence of D1 and D2 activation may have functional implications with regard to the tonic/phasic model of DA system regulation (44). For example, if the DA system exhibits sustained activation such as during a reward process, the large phasic DA release that results should stimulate both D1 and D2 receptors located within synapses. In addition, the large DA level released should be sufficient to escape the synaptic cleft, with the resultant elevated tonic DA levels stimulating the extrasynaptic D1 receptors (76,77). According to our data, this should produce synergistic inhibition. On the other hand, if the activity is maintained, there would be tonic stimulation of the extrasynaptic D1 receptors. Under this condition, subsequent stimulation of the D2 receptors preferentially located in the synaptic cleft (78) would be attenuated (75). Thus, the system appears to be oriented to provide a maximal initial response, whereas continuous activation would cause an attenuation of subsequent responses.

In addition to effects on sodium conductances, D1 stimulation also affects high voltage-activated calcium conductances. Thus, both D1 agonists and cAMP analogues reduce both N- and P-type calcium currents via a PKA-mediated process; however, these manipulations also enhance L-type calcium currents (79). In contrast, D2-receptor stimulation has been shown to modulate voltage-dependent potassium conductances in the striatum (80).

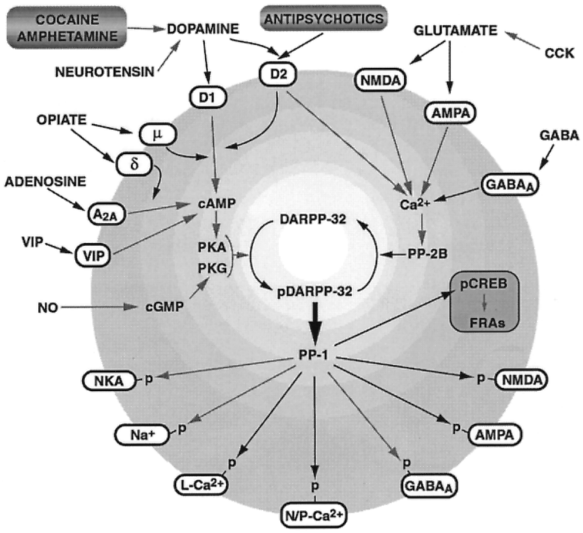

FIGURE 9.2. The DARPP-32 signaling pathway has a central role in mediating signal transduction within medium spiny neurons in the striatum. A variety of neurotransmitters act on systems regulating the phosphorylation of DARPP-32, which in turn modulates the activity of protein phosphatase-1 (PP-1). DA stimulation of D1 receptors acts via cAMP and PKA to phosphorylate DARPP-32, which in turn inhibits PP-1; this works in synergy with different protein kinases to increase the level of protein phosphorylation of their targets. In contrast, stimulation of D2 receptors attenuates D1 activation of adenylate cyclase as well as leading to calcium stimulation of protein phosphatase 2B; together, this decreases the phosphorylation state of DARPP-32. (From Greengard et al., 1999; used with permission.)

Evidence shows that a large part of the response to D1 stimulation requires the participation of a messenger cascade involving the phosphorylation of dopamine- and cAMP-regulated phosphoprotein (DARPP-32) (81). In particular, this phosphoprotein is a required component in the cascade mediating D1 function (Fig. 9.2). Moreover, mice with knockouts of DARPP-32 have been shown to lack D1 modulation of glutamate function, as well as other biochemical processes and behavioral responses known to involve D1 receptors (82). Recent studies have shown that DARPP-32 is also present in other, non–D1-containing neurons as well, including the enkephalin-containing striatal neurons (83). In this case, D2-receptor stimulation has been shown to cause a dephosphorylation of DARPP-32 via calcineurin activation by calcium influx. DARPP-32 is also present in striatal efferent projection areas, including the globus pallidus, entopeduncular nucleus, and substantia nigra (SN) (83). Thus, DARPP-32 is positioned to exert modulatory influences on DA function by affecting striatal outflow.

Modulation of Intercellular Coupling

In addition to its effects on single neurons, DA also is capable of affecting neuronal interactions on a network level. In

particular, substantial evidence has shown DA to have a potent effect over interactions among neighboring neurons in a region via its modulation of gap junction conductance. The DA system appears to regulate this coupling in two ways: (a) acutely, presumably by opening gap junctions that are already present between neurons in its target structures, and (b) as a compensatory change in response to a chronic compromise of the DA system.

Studies have shown that neurons within the dorsal and ventral striatum exhibit dye coupling, which is the morphologic correlate of gap junctions between neurons. In striatal slices recorded *in vitro,* application of the D2 agonist quinpirole causes a substantial increase in coupling, from nearly undetectable levels in the basal state to approximately 80% coupling after the agonist. D1 agonists, in contrast, do not affect coupling in a measurable way; however, in brain slices derived from a DARPP-32 knockout rat, the basal level of coupling is significantly higher than in control, and furthermore, the D2 agonist fails to increase coupling above this elevated baseline (75). These data suggest that coupling is normally suppressed by an action of DARPP-32, and that this suppression can be overcome by D2 agonist administration.

Dye coupling is also affected by maintained changes in DA system function. Changes in coupling are observed following lesions of the DA system with the neurotoxin 6-hydroxydopamine. Only the rats that exhibit severe loss of the DA innervation (i.e., >95%) also show a substantial increase in the level of dye coupling among striatal neurons (84). In all cases, the coupling was present only between cells of the same morphologic class; that is, between medium spiny neurons or between aspiny neurons. In addition, withdrawal from repeated drug treatment such as amphetamine (Fig. 9.3) (85) or antipsychotic drugs (86,87) cause a regionally selective increase in dye coupling. Amphetamine and antipsychotic drugs increase coupling in limbic striatum, whereas classic antipsychotic drugs also cause an increase in coupling in the motor-related dorsal striatum. These effects are only observed following withdrawal from the drug. Given that changes in gap junction composition are observed during repeated cocaine administration (88), it is possible that the system compensates for the presence of the drug by altering gap junctions to allow coupling to be maintained at its basal state. Under these conditions, the alteration is only observed when the adapted state is altered by withdrawal of the drug. Indeed, the observation that coupling is maintained for weeks following drug withdrawal suggests that the system may have reached a new stable steady state that could leave it more susceptible to destabilizing influences (85).

Interactions with Other Neurotransmitters

DA has also been shown to affect the response of striatal neurons to other neurotransmitters. Thus, DA was found to

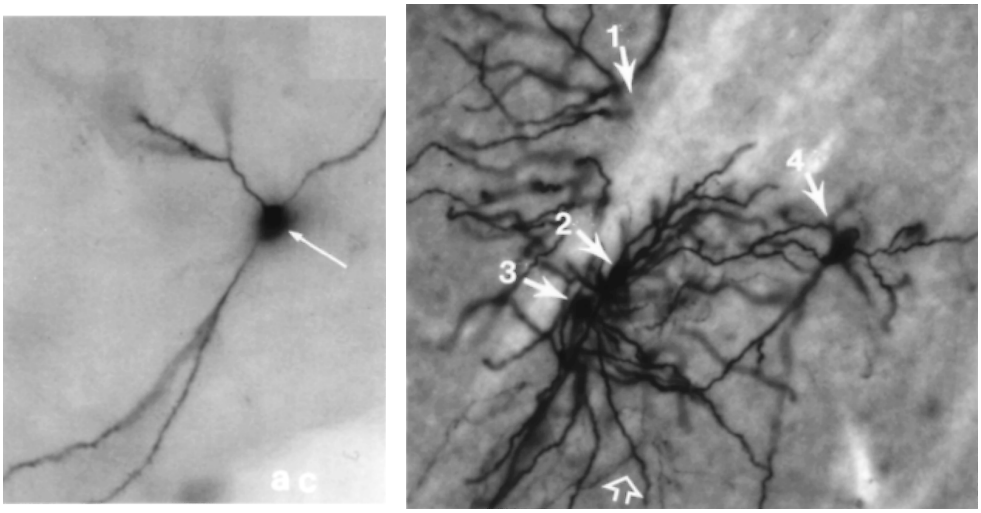

FIGURE 9.3. Long-term alterations in DA transmission lead to changes in dye coupling within the striatal complex. Medium spiny neurons in the nucleus accumbens were injected during *in vivo* intracellular recording with Lucifer yellow, which was then converted into a dense stain using antibodies. In a control rat, injection of Lucifer yellow typically labels only a single neuron *(left)*; overall, less than 15% of accumbens neurons injected in control rats exhibit labeling of more than a single neuron. In contrast, in rats that had been administered amphetamine for 2 to 4 weeks and then withdrawn for at least 7 days, the majority of injected neurons exhibited dye coupling (>60% of cells injected). In this case, four neurons were labeled after injecting a single neuron with Lucifer yellow. This increase in coupling persisted for at least 28 days following amphetamine withdrawal, but was not present if the rats were tested during the treatment phase. (From Onn and Grace, 2000; used with permission.)

modulate the response of striatal neurons to glutamatergic excitation (89). Specifically, D1-receptor stimulation enhances NMDA-mediated currents (90), which may occur via a combination of two effects: (a) a facilitation of L-type calcium conductances on dendrites (90), and (b) activation of cAMP-PKA cascade (91). A similar D1-mediated cascade also attenuates responses to GABA in the striatum (92,93). In contrast, D2 stimulation appears to preferentially attenuate non–NMDA-mediated responses (89). There is also evidence that the activation of DA neuron firing by stimulation of DA axons (70,94) occurs via a D1-mediated facilitation of glutamate transmission (94). This response, which occurs in parallel with a D1-mediated increase in c-fos in striatonigral neurons (20), is more potent when the DA axons are stimulated in a burst-firing pattern (70). This suggests that, under physiologic conditions, D1-induced facilitation of glutamate transmission in the striatum is mediated by burst-firing–dependent phasic DA release (44).

In addition to its ability to modulate neurotransmitter actions on postsynaptic neurons in the striatum, DA also plays a significant modulatory role in the presynaptic regulation of neurotransmitter release. D2 stimulation is reported to presynaptically decrease GABA release from intrinsic neurons (95) and glutamate release from corticostriatal terminals. Several studies report that D2 agonists cause a down-regulation of glutamate-mediated EPSPs on neurons in the nucleus accumbens (96–99). This is consistent with biochemical studies showing D2-mediated down-regulation of stimulated glutamate release in striatal tissue (100,101) and the presence of D2 receptors on presynaptic terminals making asymmetric synapses in the striatum (78), which are presumed to be the glutamatergic corticostriatal afferents. Interestingly, D2 stimulation does not inhibit all corticostriatal EPSPs in normal preparations (97,99); however, after acute depletion of endogenous DA, all corticoaccumbens EPSPs are sensitive to DA (99). This suggests that under normal circumstances, the presynaptic DA receptors may already be saturated with DA, as suggested by the observation that sulpiride increase EPSP amplitude in a majority of cases when administered alone (99). This unusual pharmacology may reflect a contribution of presynaptic D4 receptors on the corticoaccumbens terminals to this response (102). Although another group has reported a D1-mediated presynaptic action EPSPs evoked by intrastriatal stimulation in slices, which was interpreted as a presynaptic effect on corticostriatal terminals (103), this study employed exceedingly high doses of the D1 agonist to achieve these effects (i.e., 100 μM, which is approximately two orders of magnitude higher than should be required for a selective D1 action). Moreover, anatomic studies have shown that D1 immunoreactive axons are exceedingly rare in the striatum (77). In contrast, recent studies suggest that DA acting on postsynaptic D1 receptors may actually cause a transsynaptic feed-forward inhibition of glutamate release. Both NMDA antagonists and adenosine antagonists can block this effect. These data suggested that dopamine depresses the excitatory postsynaptic conductance (EPSC) by causing an NMDA receptor-dependent increase in extracellular adenosine, which acts presynaptically to depress glutamate release (104). The D1–NMDA-R interaction appears to be postsynaptic and acts via PKC activation (105). It is of interest to note that there is other evidence of interdependence between DA and adenosine. Thus, a recent study by Ginés and colleagues (106) have shown that D1 and adenosine A1 receptors have the capacity to form heteromeric complexes, which appear to play a role in receptor desensitization and trafficking.

Consequently, there appears to be a complex, dynamic equilibrium between dopamine and glutamate transmission within the striatal complex, with glutamate contributing to DA release and DA causing a two-pronged inhibition of glutamate release, both directly via D2 presynaptic receptors and indirectly using adenosine as an intermediary. Finally, glutamate-released NO also appears to play a significant role in modulating DA systems and striatal neuron responsivity. The tight interdependence and coregulation between DA and glutamate suggest that the system is designed to maintain stable levels of transmission to the striatal neurons over the long term, whereas short-term changes in activity in either system in response to a signal are amplified by their coordinated effects on each of these interdependent processes.

LTP and LTD

DA also appears to have a role in short- and long-term synaptic plasticity within the striatum. Specifically, DA was found to influence two opposite types of synaptic plasticity within the striatum that depend on the history of synaptic input to this structure. In cases in which striatal excitatory amino acid afferents arising from the cortex are stimulated with high frequencies in the absence of magnesium (to enhance NMDA conductances), a long-term facilitation in synaptic transmission is induced, known as long-term potentiation. In contrast, if the stimulation is carried out at a low frequency, the opposite type of plasticity is induced; that is, long-term depression (LTD) (107). These forms of synaptic plasticity have been proposed to play a major role in learning and memory formation in other structures, such as the hippocampus. Such plasticity within the striatum may be involved in such phenomena as the acquisition of complex motor skills. Repetitive stimulation of corticostriatal fibers to release glutamate is required for the induction of LTP and LTD, which only occurs in the presence of DA afferent input (108). Thus, D1 and/or D2 antagonist pretreatment prevents the induction of LTD (107), suggesting that a synergistic interaction between these receptor subtypes is required for this process to occur. In contrast, cortical stimulation-induced LTP is blocked selectively by D1 antagonists, but is actually enhanced by D2 antagonists or in D2 receptor knockout mice (109).

Prefrontal Cortex

The effects of DA within the PFC have been controversial, in that several groups have failed to produce consistent results. Thus, although studies done *in vivo* have consistently shown that direct DA application inhibits PFC neuron firing, studies using *in vitro* slice preparations have found a DA-mediated increase (110,111) and a decrease (112,113) in neuronal excitability in this region. D1 stimulation has been shown to affect sodium conductances by increasing the sodium plateau potential and shifting the activation of sodium currents to more negative potentials (114). This increase in excitability was augmented by a D1-induced decrease in slow potassium conductances (110). D1 stimulation may also activate L-type calcium conductances located in proximal dendrites of pyramidal neurons to further increase excitability in these neurons (66). Such an interaction has been postulated to differentially modulate afferent input to these neurons (Fig. 9.4). Indeed, the highly organized DAergic input onto virtually every dendrite of PFC pyramidal neurons in the primate provides a means for this neurotransmitter to regulate nearly the entire complement of glutamatergic afferents to this cell type (115). In contrast, at least part of the inhibitory action of DA on PFC pyramidal neurons may occur by DA-induced excitation of GABAergic interneurons (116), which also receive a direct DA innervation (115,117).

It is known that PFC neurons *in vivo* exhibit bistable membrane potentials, which alternate between a hyperpolarized, nonfiring condition and a depolarized plateau state where they fire action potentials. Moreover, studies have shown that the effects of DA vary depending on the state of the membrane potential at which it is administered. In particular, DA and D1 agonists cause an increase in excitability of PFC neurons in the depolarized state but not at the hyperpolarized state (118). Furthermore, studies combining *in vivo* microdialysis administration of drugs with intracellular recording (119) found that DA could potentiate glutamate-driven bistable states of PFC neurons (Fig. 9.5). Therefore, the state of the membrane may significantly influence the response to DA observed.

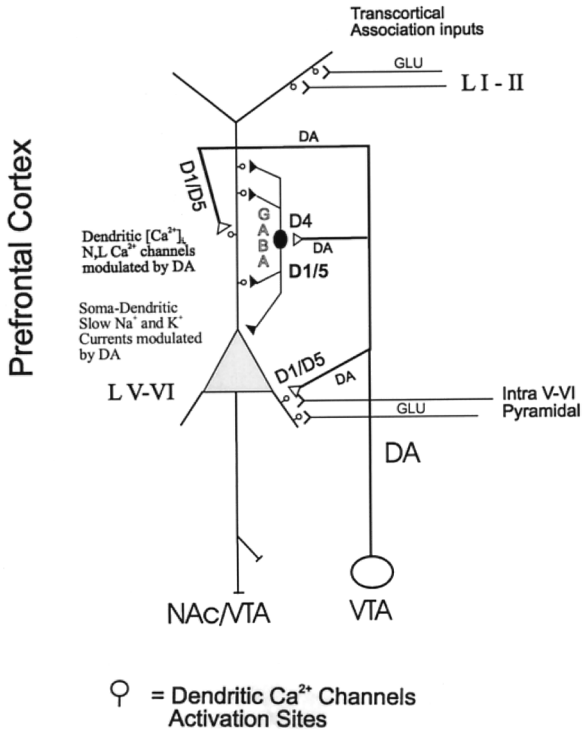

FIGURE 9.4. A simplified diagram illustrating the basic processing units within the prefrontal cortex. Each unit consists of a deep layer pyramidal neuron that projects to the nucleus accumbens or the ventral tegmental area (VTA), and a GABAergic interneuron. The apical and basal dendrites of the pyramidal neuron receive functionally segregated inputs from various cortical and subcortical regions, whereas the GABAergic interneuron, which is also modulated by DA, exerts inhibitory influences over both the apical dendrite and soma of the pyramidal neuron. By acting on both the interneuron and pyramidal neuron dendrites, the DA input has the capacity to modulate the integration of the functionally diverse array of inputs to this neuron. DA acting on D1/D5 receptors to modulate calcium channel subtypes on the apical dendrite are proposed to ''sharpen'' or, with greater stimulation, attenuate afferent signals arising from these distal regions. DA activation of the GABAergic interneuron can also serve to suppress information input from the apical dendrites. In contrast, DA modulation of conductances at the somatodendritic region amplifies low-level afferent inputs from neighboring pyramidal neurons. In this way, the DAergic input is proposed to change the pyramidal neuron from responding primarily to long-loop afferents to a state in which it responds primarily to local circuit interactions that may subserve working memory functions. (From Yang et al., 1999, with permission.)

Ventral Pallidum

The ventral pallidum (VP) receives a DA innervation from the midbrain (120), and is believed to play a significant role in several of the behavioral aspects of DA system function (121), particular related to drug sensitization (122). *In vivo* dopamine iontophoresis is known to: (a) increase and decrease VP neuronal firing (120,123); (b) potentiate or attenuate the excitatory effects of glutamate iontophoresis (124); and (c) modulate the firing rate enhancements produced in VP neurons by activating the amygdala (123) and attenuating the excitatory influences of the amygdala on pallidal cell firing at local concentration that are below that required to alter spontaneous firing (123). Dopamine receptors for the D1 and D2 class have been identified in the ventral pallidum (120), and electrophysiologic and behavioral evaluations have revealed that these two classes operate in opposition in this region (which contrasts the ''enabling'' effects reported for striatal regions and other pallidal regions). Local D1 activation induces a robust attenuation of cell firing (125) and enhances locomotor activity (126), whereas D2 activation slightly attenuates or has no effect on firing (125) and is largely without influence on motor activity

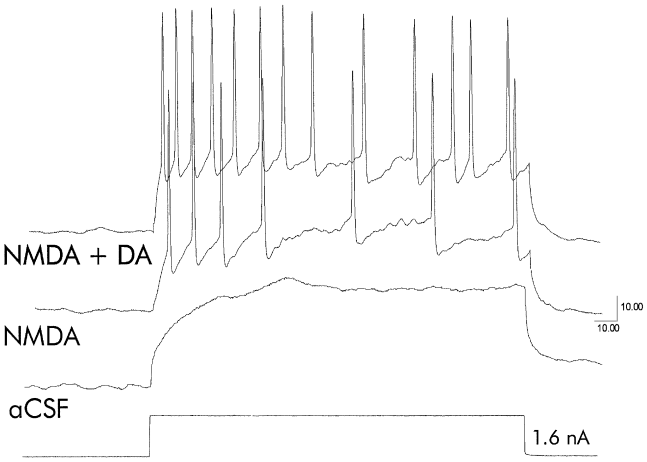

FIGURE 9.5. *In vivo* intracellular recordings from a pyramidal neuron in the frontal cortex of a chloral hydrate anesthetized rat is illustrated. The neuron was located near a microdialysis probe implanted to deliver the compounds to be tested by reverse dialysis to the environment of the cell. Administration of NMDA (20 μM) increases the number of spikes evoked by brief depolarizing pulses. Following washout, administration of NMDA + DA (30 μM) greatly increases the spikes evoked per unit current. This occurs despite the fact that DA did not appear to significantly affect current threshold. In the case of NMDA alone, the increase in the number of spikes per unit current occurs with (and may be secondary to) a decrease in current threshold; that is, the cell is simply more excitable. In the case of DA added to NMDA, the cell fires more spikes during the current-induced depolarization, but the current threshold is not further decreased; therefore, DA allowed the cell to respond maximally to the NMDA input without altering the threshold for spiking. (From Moore et al., 1998b, with permission.)

(126). Because the VP is positioned anatomically at the crossroads of the limbic and extrapyramidal system, DA modulation in this area has the ability to potently influence motivated behavior by its actions in this region (121).

Mediodorsal Thalamus

Anatomic studies have revealed the presence of a DA innervation of the mediodorsal (MD) thalamic nucleus arising from the midbrain. Using *in vitro* intracellular recordings, DA was found to alter MD neuron activity via a D2-mediated effect. In particular, quinpirole was found to increase membrane excitability and enhance the low threshold spike in these neurons (127). This was mediated at least in part via an alteration in potassium conductances. By increasing the low threshold spike, DA was found to facilitate oscillatory activity within the MD, which would potently impact thalamocortical information processing in this region.

Basolateral Amygdala

The basolateral nucleus of the amygdala (BLA) exhibits a substantial innervation from the midbrain DA neurons. The effects produced by DA in the BLA are dependent on the type of neuron recorded (128). DA causes an overall decrease in the firing rate of presumed projection neurons by two mechanisms: (a) a direct effect on the projection neuron, and (b) an activation of the firing of putative interneurons, which may be analogous to the interactions occurring in the PFC. In addition, DA produced effects on afferent drive of these neurons that was dependent on the origin of the projection system. Thus, DA attenuates afferents from limbic structures such as the PFC and MD thalamus, whereas afferent input from auditory association cortex (Te3) is potentiated (Fig. 9.6). Intracellular recordings revealed that this was a consequence of a D1-mediated decrease in PFC-evoked EPSP amplitude, combined with a D2-mediated increase in BLA input resistance that potentiated Te3 afferent drive (129). PFC stimulation also caused an excitation of BLA interneurons, which lead to a subsequent attenuation of input arising from Te3; however, in the presence of DA stimulation, the ability of the PFC stimulation to attenuate responses from Te3 was diminished (129). These data suggest that the PFC is normally capable of attenuating amygdala responses to sensory inputs, which could be a mechanism for decreasing emotional responses to familiar or nonthreatening stimuli. However, with excessive DA stimulation, the ability of the PFC to suppress amygdala-mediated emotional responses may be lost.

Substantia Nigra

In addition to the effects of DA on DA neuron autoreceptors within the substantia nigra, there are also DA receptors

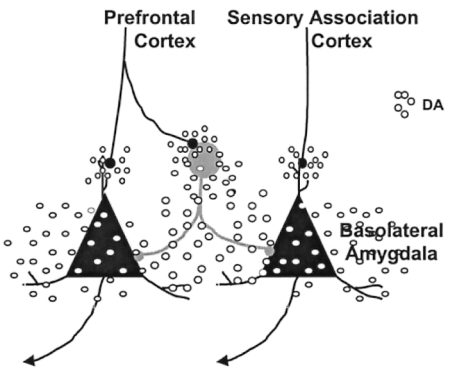

FIGURE 9.6. DA attenuates prefrontal cortex (PFC) modulation of basolateral amygdala (BLA) neuronal responses. The PFC provides a direct drive of BLA projection neurons and interneurons, whereas inputs from the sensory association cortex project only to the output neurons. As a result, the PFC inhibits the ability of the sensory association cortex to activate BLA neuron firing. However, the PFC inputs are attenuated by elevated DA levels in the BLA, removing a source of inhibition on BLA projection neurons. Furthermore, elevated DA levels in the BLA increase the input resistance of BLA projection neurons, leading to augmentation of nonsuppressed inputs to BLA neurons. Thus, DA receptor activation enables sensory-driven amygdala-mediated affective responses by removal of regulatory inputs and augmenting sensory inputs. (From Rosenkranz and Grace, 2001, with permission.)

located on striatonigral afferents to this region. Locally evoked IPSCs in neurons of the substantia nigra zona reticulata (ZR) are GABAergic in nature, and are believed to arise from striatal afferents. These IPSCs are depressed by DA acting on D1 but not D2 receptors. The fact that this depression was accompanied by increased paired-pulse facilitation and not by a change in membrane potential or conductance indicates that the effect is likely presynaptic in origin (130). It is interesting to note that the striatonigral neurons that exhibit terminal D1 receptors do not exhibit D1 receptors on their local collaterals within the striatum (77). This suggests that these neurons can selectively traffic presynaptic receptors to long projection sites.

BEHAVIORAL CORRELATES OF DA SYSTEM FUNCTION

DA is known to play an important role in working memory and response sequencing in the PFC. In particular, DA acting on D1 receptors has been shown to exert dual actions on these types of behaviors. Thus, D1 agonist administration into the PFC of rats with poor performance on attentional function tasks significantly improved their performance, whereas impairing performance in rats that had higher baseline attentional skills (131). This is consistent with studies suggesting that optimal DA levels are required to maintain function in the PFC, with both too high or low D1 stimulation leading to impaired working memory function (132,133).

Several studies have shown that the DA system is activated by rewarding stimuli, such as food (134,135); however, it is becoming evident that DA is not the reward signal per se, but instead is necessary for the acquisition of reinforcing stimuli. In some cases, DA has been described as a type of error signal (136), in which the predicted occurrence of reward does not correlate with the behavioral response emitted to generate this reward. Thus, when a task is well learned, DA neuron firing no longer is a necessary correlate of the reward signal. But if reward is absent, DA neuron firing appears to decrease (137). Studies of DA overflow in the nucleus accumbens show that DA is released when the DA cell bodies are stimulated electrically. However, when the stimulation is contingent on a bar press by the rat, the DA overflow does not occur even in the presence of the electrical stimulus (138). These data suggest that the lack of DA system activation during a well-learned contingent reinforcement task is not simply a failure to activate DA neuron firing, but instead may represent an offsetting inhibitory influence over the DA system, either at the level of the DA cell body or the terminal. Indeed, the reports of an anticipatory increase in extracellular DA in the accumbens prior to self-administration of a DA drug such as cocaine (139) could potentially increase extracellular DA sufficiently to inhibit phasic DA release occurring via stimulation of the DA cell bodies (44).

Overall, studies support the suggestion that DA actions in the PFC may have a greater involvement in the regulation of novel circumstances, with the striatum involved more in expression of learned behaviors (140). This model is consistent with the physiologic studies cited that show that DA can selectively activate circuits within frontal cortex and striatal complex, potentially facilitating information flow along new pathways when a change occurs, but playing less of a role once a new stable steady state is achieved at which the internal representation is at equilibrium with the predicted external events.

SUMMARY OF DA ACTIONS

It is clear from the preceding that DA exerts multiple actions at each level of integration within the cortico-striato-pallido-thalamo-cortical loop. The actions exerted at each stage of this loop appear to have marked differences, however. For example, DA acting on primary inputs to this circuit (e.g., the amygdala and PFC) affect both primary neurons and interneurons, with the net effect being a selective potentiation of particular afferent drive sources. Within the striatum, DA exerts actions on presynaptic terminals containing glutamate, as well as affecting the actions of glutamate on postsynaptic neurons. Combined with the reciprocal feedback interactions between glutamate and DA terminals, this system appears to be designed to facilitate rapid changes in input states while attenuating any long-term alterations that may occur. Moreover, the effects of DA on cellular coupling provide a type of reversible hardwiring, which may facilitate performance of well-learned motor actions (141). Within the VP and MD, DA has effects that would alter the behavioral output by changing the state of neuronal activity within these structures. Therefore, DA could enable multiple state transitions within these regions, selecting among competing inputs, facilitating information transfer, and altering states that would ultimately feed back via the thalamus to reinforce cortical activity that is most pertinent to the task at hand (58,141).

The actions of DA may best be described not in terms of inhibition or excitation, but rather as related to the gating of inputs and modulation of states of neuronal elements. This modulation of information integration is then further influenced at the network level via the actions of DA on interneurons or cell coupling. Such a description is consistent with the behavioral actions of this transmitter as well, in that it does not directly produce a motor output or reward signal, but instead modulates inputs and adjusts the states of the organism in order to redirect the stimulus-response output to achieve the most effective behavioral strategy. Given these constraints, one could imagine how dysfunctions in such a system could produce the profound pathologic states that have been attributed to DA.

ACKNOWLEDGMENTS

Dr. Grace has received research support from Pharmacia-Upjohn and Warner-Lambert/Parke Davis, as well as travel support for presenters at a scientific panel he co-organized for Pharmacia-Upjohn.

REFERENCES

1. Grace AA, Bunney BS. Intracellular and extracellular electrophysiology of nigral dopaminergic neurons—1. Identification and characterization. *Neuroscience* 1983;10:301–315.
2. Grace AA, Onn SP. Morphology and electrophysiological properties of immunocytochemically identified rat dopamine neurons recorded *in vitro*. *J Neurosci* 1989;9:3463–3481.
3. Grace AA, Bunney BS. The control of firing pattern in nigral dopamine neurons: single spike firing. *J Neurosci* 1984;4: 2866–2876.
4. Harden DG, Grace AA. Activation of dopamine cell firing by repeated L-DOPA administration to dopamine-depleted rats: its potential role in mediating the therapeutic response to L-DOPA treatment. *J Neurosci* 1995;15:6157–6166.
5. Pucak ML, Grace AA. Effects of haloperidol on the activity and membrane physiology of substantia nigra dopamine neurons recorded in vitro. *Brain Res* 1996;713:44–52.
6. Mercuri NB, Saiardi A, Bonci A, et al. Loss of autoreceptor function in dopaminergic neurons from dopamine D2 receptor deficient mice. *Neuroscience* 1997;79:323–327.
7. Mercuri NB, Scarponi M, Bonci A, et al. Monoamine oxidase inhibition causes a long-term prolongation of the dopamine-induced responses in rat midbrain dopaminergic cells. *J Neurosci* 1997;17:2267–2272.
8. Mercuri NB, Grillner P, Bernardi G. N-methyl-D-aspartate receptors mediate a slow excitatory postsynaptic potential in the rat midbrain dopaminergic neurons. *Neuroscience* 1996;74: 785–792.
9. Mercuri NB, Federici M, Bernardi G. Inhibition of catechol-O-methyltransferase (COMT) in the brain does not affect the action of dopamine and levodopa: an in vitro electrophysiological evidence from rat mesencephalic dopamine neurons. *J Neural Transm* 1999;106:1135–1140.
10. Grace AA, Bunney BS. Opposing effects of striatonigral feedback pathways on midbrain dopamine cell activity. *Brain Res* 1985;333:271–284.
11. Grace AA, Bunney BS. Effects of baclofen on nigral dopaminergic cell activity following acute and chronic haloperidol treatment. *Brain Res Bull* 1980;5:537–543.
12. Erhardt S, Nissbrandt H, Engberg G. Activation of nigral dopamine neurons by the selective GABA(B)-receptor antagonist SCH 50911. *J Neural Transm* 1999;106:383–394.
13. Paladini CA, Celada P, Tepper JM. Striatal, pallidal, and pars reticulata evoked inhibition of nigrostriatal dopaminergic neurons is mediated by GABA(A) receptors in vivo. *Neuroscience* 1999;89:799–812.
14. Grace AA, Bunney BS. The control of firing pattern in nigral dopamine neurons: burst firing. *J Neurosci* 1984;4:2877–2890.
15. Bonci A, Grillner P, Siniscalchi A, et al. Glutamate metabotropic receptor agonists depress excitatory and inhibitory transmission on rat mesencephalic principal neurons. *Eur J Neurosci* 1997;9:2359–2369.
16. Grillner P, Berretta N, Bernardi G, et al. Muscarinic receptors depress GABAergic synaptic transmission in rat midbrain dopamine neurons. *Neuroscience* 2000;96:299–307.
17. Grillner P, Bonci A, Svensson TH, et al. Presynaptic muscarinic (M3) receptors reduce excitatory transmission in dopamine neurons of the rat mesencephalon. *Neuroscience* 1999;91:557–565.
18. Keefe KA, Zigmond MJ, Abercrombie, ED Extracellular dopamine in striatum: influence of nerve impulse activity in medial forebrain bundle and local glutamatergic input. *Neuroscience* 1992;47:325–332.
19. Chergui K, Nomikos GG, Mathe JM, et al. Burst stimulation of the medial forebrain bundle selectively increase Fos-like immunoreactivity in the limbic forebrain of the rat. *Neuroscience* 1996;72:141–156.
20. Chergui K, Svenningsson P, Nomikos GG, et al. Increased expression of NGFI-A mRNA in the rat striatum following burst stimulation of the medial forebrain bundle. *Eur J Neurosci* 1997;9:2370–2382.
21. Lokwan SJ, Overton PG, Berry MS, et al. Stimulation of the pedunculopontine tegmental nucleus in the rat produces burst firing in A9 dopaminergic neurons. *Neuroscience* 1999;92: 245–254.
22. Smith ID, Grace AA. Role of the subthalamic nucleus in the regulation of nigral dopamine neuron activity. *Synapse* 1992; 12:287–303.
23. Kitai ST, Shepard PD, Callaway JC, et al. Afferent modulation of dopamine neuron firing patterns. *Curr Opin Neurobiol* 1999; 9:690–697.
24. Shepard PD, Stump D. Nifedipine blocks apamin-induced bursting activity in nigral dopamine-containing neurons. *Brain Res* 1999;817:104–109.
25. Tong ZY, Overton PG, Clark D. Stimulation of the prefrontal cortex in the rat induces patterns of activity in midbrain dopaminergic neurons, which resemble natural burst events. *Synapse* 1996;22:195–208.
26. Carr DB, O'Donnell P, Card JP, et al. Dopamine terminals in the rat prefrontal cortex synapse on pyramidal cells that project to the nucleus accumbens. *J Neurosci* 1999;19:11049–11060.
27. Carr DB, Sesack SR. Projections from the rat prefrontal cortex to the ventral tegmental area: target specificity in the synaptic associations with mesoaccumbens and mesocortical neurons. *J Neurosci* 2000;20:3864–3873.
28. Taber MT, Das S, Fibiger HC. Cortical regulation of subcortical dopamine release: mediation via the ventral tegmental area. *J Neurochem* 1995;65:1407–1410.
29. Legault M, Rompre PP, Wise RA. Chemical stimulation of the ventral hippocampus elevates nucleus accumbens dopamine by activating dopaminergic neurons of the ventral tegmental area. *J Neurosci* 2000;20:1635–1642.
30. Legault M, Wise RA. Injections of N-methyl-D-aspartate into the ventral hippocampus increase extracellular dopamine in the ventral tegmental area and nucleus accumbens. *Synapse* 1999; 31:241–249.
31. Floresco SB, Todd CL, Grace AA. Glutamatergic afferents from the hippocampus to the nucleus accumbens regulate activity of ventral tegmental area dopamine neurons. *J Neurosci* 2001;21: 4915–4922.
32. Haber SN, Fudge JL, McFarland NR. Striatonigrostriatal pathways in primates form an ascending spiral from the shell to the dorsolateral striatum. *J Neurosci* 2000;20:2369–2382.
33. Braszko JJ, Bannon MJ, Bunney BS, et al. Intrastriatal kainic acid: acute effects on electrophysiological and biochemical measures of nigrostriatal dopaminergic activity. *J Pharmacol Exp Ther* 1981;216:289–293.
34. West AR, Grace AA. Striatal nitric oxide signaling regulates the neuronal activity of midbrain dopamine neurons in vivo. *J Neurophysiol* 2000;83:1796–1808.

35. Abercrombie ED, Keefe KA, DiFrischia DS, et al. Differential effect of stress on in vivo dopamine release in striatum, nucleus accumbens, and medial frontal cortex. *J Neurochem* 1989;52: 1655–1658.
36. Inglis FM, Moghaddam B. Dopaminergic innervation of the amygdala is highly responsive to stress. *J Neurochem* 1999;72: 1088–1094.
37. Davis M, Hitchcock JM, Bowers MB, et al. Stress-induced activation of prefrontal cortex dopamine turnover: blockade by lesions of the amygdala. *Brain Res* 1994;664:207–210.
38. King D, Zigmond MJ, Finlay JM. Effects of dopamine depletion in the medial prefrontal cortex on the stress-induced increase in extracellular dopamine in the nucleus accumbens core and shell. *Neuroscience* 1997;77:141–153.
39. Harden DG, King D, Finlay JM, et al. Depletion of dopamine in the prefrontal cortex decreases the basal electrophysiological activity of mesolimbic dopamine neurons. *Brain Res* 1998;794: 96–102.
40. Moore H, Rose HJ, Grace AA. Chronic cold stress reduces the spontaneous activity of ventral tegmental dopamine neurons. *Neuropsychopharmacology* 2000;24:410–419.
41. Jones SR, Garris PA, Kilts CD, et al. Comparison of dopamine uptake in the basolateral amygdaloid nucleus, caudate-putamen, and nucleus accumbens of the rat. *J Neurochem* 1995;64: 2581–2589.
42. Giros B, Jaber M, Jones SR, et al. Hyperlocomotion and indifference to cocaine and amphetamine in mice lacking the dopamine transporter. *Nature* 1996;379:606–612.
43. Moore H, West AR, Grace AA. The regulation of forebrain dopamine transmission: relevance to the pathophysiology and psychopathology of schizophrenia. *Biol Psychiatry* 1999;46: 40–55.
44. Grace AA. Phasic versus tonic dopamine release and the modulation of dopamine system responsivity: a hypothesis for the etiology of schizophrenia. *Neuroscience* 1991;41:1–24.
45. Floresco SB, Phillips AG. Dopamine and hippocampal inputs to the nucleus accumbens play an essential role in the search for food in an unpredictable environment. *Psychobiology* 1999; 27:277–286.
46. Blaha CD, Yang CR, Floresco SB, et al. Stimulation of the ventral subiculum of the hippocampus evokes glutamate receptor-mediated changes in dopamine efflux in the rat nucleus accumbens. *Eur J Neurosci* 1997;9:902–911.
47. Floresco SB, Yang CR, Phillips AG, et al. Basolateral amygdala stimulation evokes glutamate receptor-dependent dopamine efflux in the nucleus accumbens of the anaesthetized rat. *Eur J Neurosci* 1998;10:1241–1251.
48. Gracy KN, Pickel VM. Ultrastructural immunocytochemical localization of the N-methyl-D-aspartate receptor and tyrosine hydroxylase in the shell of the rat nucleus accumbens. *Brain Res* 1996;739:169–181.
49. Antonelli T, Govoni BM, Bianchi C, et al. Glutamate regulation of dopamine release in guinea pig striatal slices. *Neurochem Int* 1997;30:203–209.
50. Ohno M, Watanabe S. Persistent increase in dopamine release following activation of metabotropic glutamate receptors in the rat nucleus accumbens. *Neurosci Letts* 1995;200:113–116.
51. Verma A, Moghaddam B. Regulation of striatal dopamine release by metabotropic glutamate receptors. *Synapse* 1998;28: 220–226.
52. West AR, Galloway MP. Intrastriatal infusion of (+/−)-S-nitroso-*N*-acetylpenicillamine releases vesicular dopamine via an ionotropic glutamate receptor-mediated mechanism: an in vivo microdialysis study in chloral hydrate-anesthetized rats. *J Neurochem* 1996;66:1971–1980.
53. West AR, Galloway MP. Endogenous nitric oxide facilitates striatal dopamine and glutamate efflux in vivo: role of ionotropic glutamate receptor-dependent mechanisms. *Neuropharmacology* 1997;36:1571–1581.
54. West AR, Galloway MP. Desensitization of 5-hydroxytryptamine-facilitated dopamine release in vivo. *Eur J Pharmacol* 1996;298:241–245.
55. Smolders I, De Klippel N, Sarre S, et al. Tonic GABAergic modulation of striatal dopamine release studied by *in vivo* microdialysis in the freely moving rat. *Eur J Pharmacol* 1995;284: 83–91.
56. Wolf ME, Dahlin SL, Hu XT, et al. Effects of lesions of prefrontal cortex, amygdala, or fornix on behavioral sensitization to amphetamine: comparison with N-methyl-D-aspartate antagonists. *Neuroscience* 1995;69:417–439.
57. Grace AA. The tonic/phasic model of dopamine system regulation: its relevance for understanding how stimulant abuse can alter basal ganglia function. *Drug Alcohol Depend* 1995;37: 111–129.
58. Grace AA. Psychostimulant action on dopamine and limbic system function: relevance to the pathophysiology and treatment of ADHD. In: *Stimulant drugs and ADHD: basic and clinical neuroscience.* New York: Oxford University Press, 2001: 134–157.
59. Grace AA, Bunney BS, Moore H, et al. Dopamine-cell depolarization block as a model for the therapeutic actions of antipsychotic drugs. *Trends Neurosci* 1997;20:31–37.
60. Moore H, Todd CL, Grace AA. Striatal extracellular dopamine levels in rats with haloperidol-induced depolarization block of substantia nigra dopamine neurons. *J Neurosci* 1998;18: 5068–5077.
61. Chergui K, Suaud-Chagny MF, Gonon F. Nonlinear relationship between impulse flow, dopamine release and dopamine elimination in the rat brain in vivo. *Neuroscience* 1994;62: 641–645.
62. Jones SR, Gainetdinov RR, Jaber M, et al. Profound neuronal plasticity in response to inactivation of the dopamine transporter. *Proc Natl Acad Sci USA* 1998;95:4029–4034.
63. Sesack SR, Hawrylak VA, Matus C, et al. Dopamine axon varicosities in the prelimbic division of the rat prefrontal cortex exhibit sparse immunoreactivity for the dopamine transporter. *J Neurosci* 1998;18:2697–2708.
64. Gresch PJ, Sved AF, Zigmond MJ, et al. Local influence of endogenous norepinephrine on extracellular dopamine in rat medial prefrontal cortex. *J Neurochem* 1995;65:111–116.
65. Smiley JF, Levey AI, Ciliax BJ, et al. D1 dopamine receptor immunoreactivity in human and monkey cerebral cortex: predominant and extrasynaptic localization in dendritic spines. *Proc Natl Acad Sci USA* 1994;91:5720–5724.
66. Yang CR, Seamans JK, Gorelova N. Developing a neuronal model for the pathophysiology of schizophrenia based on the nature of electrophysiological actions of dopamine in the prefrontal cortex. *Neuropsychopharmacology* 1999;21:161–194.
67. Calabresi P, Mercuri N, Stanzione P, et al. Intracellular studies on the dopamine-induced firing inhibition of neostriatal neurons in vitro: evidence for D1 receptor involvement. *Neuroscience* 1987;20:757–771.
68. O'Donnell P, Grace AA. Dopaminergic reduction of excitability in nucleus accumbens neurons recorded in vitro. *Neuropsychopharmacology* 1996;15:87–97.
69. White FJ, Wang RY. Electrophysiological evidence for the existence of both D-1 and D-2 dopamine receptors in the rat nucleus accumbens. *J Neurosci* 1986;6:274–280.
70. Gonon F. Prolonged and extrasynaptic excitatory action of do-

pamine mediated by D1 receptors in the rat striatum in vivo. *J Neurosci* 1997;17:5972–5978.
71. Hernandez-Lopez S, Bargas J, Surmeier DJ, et al. D1 receptor activation enhances evoked discharge in neostriatal medium spiny neurons by modulating an L-type Ca2+ conductance. *J Neurosci* 1997;17:3334–3342.
72. Cepeda C, Chandler SH, Shumate LW, et al. Persistent Na+ conductance in medium-sized neostriatal neurons: characterization using infrared videomicroscopy and whole cell patch-clamp recordings. *J Neurophysiol* 1995;74:1343–1348.
73. Surmeier DJ, Eberwine J, Wilson CJ, et al. Dopamine receptor subtypes colocalize in rat striatonigral neurons. *Proc Natl Acad Sci USA* 1992;89:10178–10182.
74. Schiffmann SN, Lledo PM, Vincent JD. Dopamine D1 receptor modulates the voltage-gated sodium current in rat striatal neurones through a protein kinase A. *J Physiol (Lond)* 1995;483: 95–107.
75. Onn SP, West AR, Grace AA. Dopamine regulation of neuronal and network interactions within the striatum. *Trends Neurosci* 2000;23:S48–S56.
76. Jansson A, Goldstein M, Tinner B, et al. On the distribution patterns of D1, D2, tyrosine hydroxylase and dopamine transporter immunoreactivities in the ventral striatum of the rat. *Neuroscience* 1999;89:473–489.
77. Hersch SM, Ciliax BJ, Gutekunst CA, et al. Electron microscopic analysis of D1 and D2 dopamine receptor proteins in the dorsal striatum and their synaptic relationships with motor corticostriatal afferents. *J Neurosci* 1995;15:5222–5237.
78. Sesack SR, Aoki C, Pickel VM. Ultrastructural localization of D2 receptor-like immunoreactivity in midbrain dopamine neurons and their striatal targets. *J Neurosci* 1994;14:88–106.
79. Surmeier DJ, Bargas J, Hemmings HC Jr, et al. Modulation of calcium currents by a D1 dopaminergic protein kinase/phosphatase cascade in rat neostriatal neurons. *Neuron* 1995;14: 385–397.
80. Lin YJ, Greif GJ, Freedman JE. Permeation and block of dopamine-modulated potassium channels on rat striatal neurons by cesium and barium ions. *J Neurophysiol* 1996;76:1413–1422.
81. Greengard P, Allen PB, Nairn AC. Beyond the dopamine receptor: the DARPP-32/protein phosphatase-1 cascade. *Neuron* 1999;23:435–447.
82. Fienberg AA, Hiroi N, Mermelstein PG, et al. DARPP-32: regulator of the efficacy of dopaminergic neurotransmission. *Science* 1998;281:838–842.
83. Langley KC, Bergson C, Greengard P, et al. Co-localization of the D1 dopamine receptor in a subset of DARPP-32-containing neurons in rat caudate-putamen. *Neuroscience* 1997;78: 977–983.
84. Onn SP, Grace AA. Alterations in electrophysiological activity and dye coupling of striatal spiny and aspiny neurons in dopamine-denervated rat striatum recorded in vivo. *Synapse* 1999; 33:1–15.
85. Onn SP, Grace AA. Amphetamine withdrawal alters bistable states and cellular coupling in rat prefrontal cortex and nucleus accumbens neurons recorded in vivo. *J Neurosci* 2000;20: 2332–2345.
86. Onn SP, Grace AA. Repeated treatment with haloperidol and clozapine exerts differential effects on dye coupling between neurons in subregions of striatum and nucleus accumbens. *J Neurosci* 1995;15:7024–7036.
87. O'Donnell P, Grace AA. Different effects of subchronic clozapine and haloperidol on dye-coupling between neurons in the rat striatal complex. *Neuroscience* 1995;66:763–767.
88. Bennett SA, Arnold JM, Chen J, et al. Long-term changes in connexin32 gap junction protein and mRNA expression following cocaine self-administration in rats. *Eur J Neurosci* 1999;11: 3329–3338.
89. Cepeda C, Levine MS. Dopamine and N-methyl-D-aspartate receptor interactions in the neostriatum. *Dev Neurosci* 1998;20: 1–18.
90. Cepeda C, Colwell CS, Itri JN, et al. Dopaminergic modulation of NMDA-induced whole cell currents in neostriatal neurons in slices: contribution of calcium conductances. *J Neurophysiol* 1998;79:82–94.
91. Colwell CS, Levine MS. Excitatory synaptic transmission in neostriatal neurons: regulation by cAMP-dependent mechanisms. *J Neurosci* 1995;15:1704–1713.
92. Flores-Hernandez J, Hernandez S, Snyder GL, et al. D(1) dopamine receptor activation reduces GABA(A) receptor currents in neostriatal neurons through a PKA/DARPP-32/PP1 signaling cascade. *J Neurophysiol* 2000;83:2996–3004.
93. Nicola SM, Malenka RC. Modulation of synaptic transmission by dopamine and norepinephrine in ventral but not dorsal striatum. *J Neurophysiol* 1998;79:1768–1776.
94. Gonon F, Sundstrom L. Excitatory effects of dopamine released by impulse flow in the rat nucleus accumbens in vivo. *Neuroscience* 1996;75:13–18.
95. Delgado A, Sierra A, Querejeta E, et al. Inhibitory control of the GABAergic transmission in the rat neostriatum by D2 dopamine receptors. *Neuroscience* 2000;95:1043–1048.
96. Brown JR, Arbuthnott GW. The electrophysiology of dopamine (D2) receptors: a study of the actions of dopamine on corticostriatal transmission. *Neuroscience* 1983;10:349–355.
97. Flores-Hernandez J, Galarraga E, Bargas J. Dopamine selects glutamatergic inputs to neostriatal neurons. *Synapse* 1997;25: 185–195.
98. Hsu KS, Huang CC, Yang CH, et al. Presynaptic D2 dopaminergic receptors mediate inhibition of excitatory synaptictransmission in rat neostriatum. *Brain Res* 1995;690:264–268.
99. O'Donnell P, Grace AA. Tonic D2-mediated attenuation of cortical excitation in nucleus accumbens neurons recorded in vitro. *Brain Res* 1994;634:105–112.
100. Maura G, Giardi A, Raiteri M. Release-regulating D-2 dopamine receptors are located on striatal glutamatergic nerve terminals. *J Pharmacol Exp Ther* 1988;247:680–684.
101. Yamamoto BK, Davy S. Dopaminergic modulation of glutamate release in striatum as measured by microdialysis. *J Neurochem* 1992;58:1736–1742.
102. Svingos AL, Periasamy S, Pickel VM. Presynaptic dopamine D(4) receptor localization in the rat nucleus accumbens shell. *Synapse* 2000;36:222–232.
103. Nicola SM, Kombian SB, Malenka RC. Psychostimulants depress excitatory synaptic transmission in the nucleus accumbens via presynaptic D1-like dopamine receptors. *J Neurosci* 1996; 16:1591–604.
104. Harvey J, Lacey MG. A postsynaptic interaction between dopamine D1 and NMDA receptors promotes presynaptic inhibition in the rat nucleus accumbens via adenosine release. *J Neurosci* 1997;17:5271–5280.
105. Chergui K, Lacey MG. Modulation by dopamine D1-like receptors of synaptic transmission and NMDA receptors in rat nucleus accumbens is attenuated by the protein kinase C inhibitor Ro 32-0432. *Neuropharmacology* 1999;38:223–231.
106. Ginés S, Hillion J, Torvinen M, et al. Dopamine D1 and adenosine A1 receptors form functionally interacting heteromeric complexes. *Proc Natl Acad Sci USA* 2000;97:8606–8611.
107. Calabresi P, Centonze D, Gubellini P, et al. Synaptic transmission in the striatum: from plasticity to neurodegeneration. *Prog Neurobiol* 2000;61:231–265.
108. Centonze D, Gubellini P, Picconi B, et al. Unilateral dopamine

denervation blocks corticostriatal LTP. *J Neurophysiol* 1999;82: 3575–3579.
109. Calabresi P, Saiardi A, Pisani A, et al. Abnormal synaptic plasticity in the striatum of mice lacking dopamine D2 receptors. *J Neurosci* 1997;17:4536–4544.
110. Yang CR, Seamans JK. Dopamine D1 receptor actions in layers V–VI rat prefrontal cortex neurons in vitro: modulation of dendritic-somatic signal integration. *J Neurosci* 1996;16: 1922–1935.
111. Shi WX, Zheng P, Liang XF, et al. Characterization of dopamine-induced depolarization of prefrontal cortical neurons. *Synapse* 1997;26:415–422.
112. Gulledge AT, Jaffe DB. Dopamine decreases the excitability of layer V pyramidal cells in the rat prefrontal cortex. *J Neurosci* 1998;18:9139–9151.
113. Geijo-Barrientos E, Pastore C. The effects of dopamine on the subthreshold electrophysiological responses of rat prefrontal cortex neurons in vitro. *Eur J Neurosci* 1995;7:358–366.
114. Gorelova N, Yang CR. Dopamine D1/D5 receptor activation modulates a persistent sodium current in rat prefrontal cortical neurons in vitro. *J Neurophysiol* 2000;84:75–87.
115. Krimer LS, Jakab RL, Goldman-Rakic PS. Quantitative three-dimensional analysis of the catecholaminergic innervation of identified neurons in the macaque prefrontal cortex. *J Neurosci* 1997;17:7450–7461.
116. Zhou FM, Hablitz JJ. Dopamine modulation of membrane and synaptic properties of interneurons in rat cerebral cortex. *J Neurophysiol* 1999;81:967–976.
117. Sesack SR, Snyder CL, Lewis DA. Axon terminals immunolabeled for dopamine or tyrosine hydroxylase synapse on GABA-immunoreactive dendrites in rat and monkey cortex. *J Comp Neurol* 1995;363:264–280.
118. Lavin A, Grace AA. Stimulation of D1-type dopamine receptors enhances excitation in PFC pyramidal neurons in a state-dependent manner. *Neuroscience* 2001;104:335–346.
119. Moore H, Lavin A, Grace AA. Interactions between dopamine and NMDA delivered locally by microdialysis during in vivo intracellular recording of rat prefrontal cortical neurons. *Soc Neurosci Abstr* 1998;24:2061.
120. Napier TC, Muench MB, Maslowsli, RJ, et al. Is dopamine a neurotransmitter within the ventral pallidum/substantia innominata? In: *The basal forebrain: anatomy to function.* New York: Plenum Press, 1991:183–195.
121. Napier TC. Transmitter actions and interactions on pallidal neuronal function. In: *Limbic motor circuits and neuropsychiatry.* Boca Raton, FL: CRC Press, 1993:125–153.
122. Johnson PI, Mitrovic I, Napier TC. Effect of chronic cocaine treatment on dopamine-induced neuronal activity in the ventral pallidum. *Soc Neurosci Abstr* 1997;23:526.
123. Maslowski-Cobuzzi RJ, Napier TC. Activation of dopaminergic neurons modulates ventral pallidal responses evoked by amygdala stimulation. *Neuroscience* 1994;62:1103–1119.
124. Johnson PI, Napier TC. GABA- and glutamate-evoked responses in the rat ventral pallidum are modulated by dopamine. *Eur J Neurosci* 1997;9:1397–1406.
125. Napier TC, Maslowski-Cobuzzi RJ. Electrophysiological verification of the presence of D1 and D2 dopamine receptors within the ventral pallidum. *Synapse* 1994;17:160–166.
126. Gong W, Neill DB, Lynn M, et al. Dopamine D1/D2 agonists injected into nucleus accumbens and ventral pallidum differentially affect locomotor activity depending on site. *Neuroscience* 1999;93:1349–1358.
127. Lavin A, Grace AA. Dopamine modulates the responsivity of mediodorsal thalamic cells recorded in vitro. *J Neurosci* 1998; 18:10566–10578.
128. Rosenkranz JA, Grace AA. Modulation of basolateral amygdala neuronal firing and afferent drive by dopamine receptor activation in vivo. *J Neurosci* 1999;19:11027–11039.
129. Rosenkranz JA, Grace AA. Dopamine attenuates prefrontal cortical suppression of sensory inputs to the basolateral amygdala of rats. *J Neurosci* 2001;21:4090–4103.
130. Miyazaki T, Lacey MG. Presynaptic inhibition by dopamine of a discrete component of GABA release in rat substantia nigra pars reticulata. *J Physiol (Lond)* 1998;513:805–817.
131. Granon S, Passetti F, Thomas KL, et al. Enhanced and impaired attentional performance after infusion of D1 dopaminergic receptor agents into rat prefrontal cortex. *J Neurosci* 2000;20: 1208–1215.
132. Murphy BL, Arnsten AF, Goldman-Rakic PS, et al. Increased dopamine turnover in the prefrontal cortex impairs spatial working memory performance in rats and monkeys. *Proc Natl Acad Sci USA* 1996;93:1325–1329.
133. Arnsten AF. Catecholamine regulation of the prefrontal cortex. *J Psychpharmacol* 1997;11:151–162.
134. Mirenowicz J, Schultz W. Preferential activation of midbrain dopamine neurons by appetitive rather than aversive stimuli. *Nature* 1996;379:449–451.
135. Taber MT, Fibiger HC. Feeding-evoked dopamine release in the nucleus, accumbens: regulation by glutamatergic mechanisms. *Neuroscience* 1997;76:1105–1112.
136. Hollerman JR, Schultz W. Dopamine neurons report an error in the temporal prediction of reward during learning. *Nat Neurosci* 1998;1:304–309.
137. Schultz W. Predictive reward signal of dopamine neurons. *J Neurophysiol* 1998;80:1–27.
138. Garris PA, Kilpatrick M, Bunin MA, et al. Dissociation of dopamine release in the nucleus accumbens from intracranial self-stimulation. *Nature* 1999;398:67–69.
139. Gratton A, Wise RA. Drug- and behavior-associated changes in dopamine-related electrochemical signals during intravenous cocaine self-administration in rats. *J Neurosci* 1994;14: 4130–4146.
140. Wilkinson LS, Humby T, Killcross AS, et al. Dissociations in dopamine release in medial prefrontal cortex and ventral striatum during the acquisition and extinction of classical aversive conditioning in the rat. *Eur J Neurosci* 1998;10:1019–1026.
141. Grace AA, Moore H. Regulation of information flow in the nucleus accumbens: A model for the pathophysiology of schizophrenia. In: *Origins and development of schizophrenia: Advances in experimental psychopathology.* Washington, DC: American Psychological Association Press, 1998:123–157.